Disaster Monitoring and Warning System by the Niigata Prefectural Government after the Mid Niigata Prefecture Earthquake

Yukihiko Takahashi,[1)] Koichi Miki,[1)] Einosuke Nozawa[1)] and Takeshi Sakai[2)]
1), 2), 3) Erosion Control Division, Department of Public Works, Niigata Prefectural Government, 4-1 Shinko-cho, Niigata City, Niigata Pref., 950-8570, Japan (t0800905@mail.pref.niigata.jp)
4) Co. Takuwa Niigata office 1-23 Yoneyama 4choume, Niigata City, Niigata Pref., 950-0916, Japan

Abstract

At 5:56 p.m. on October 23, 2004, an earthquake with a magnitude of 6.8 shook Chuetsu area of Niigata Prefecture. The epicenter was located in the vicinity of Kawaguchi Town. The maximum seismic intensity of 7.0 was recorded. A lot of aftershocks occurred repeatedly; many of them recorded seismic intensity of over 6.0. The earthquake killed more than fifty people and cut off the supply of essential utilities. The area's infrastructures including public facilities were almost completely destroyed, and numerous landslides caused blockage in river channels and formed natural dams. In particular, two large natural dams were formed due to blockage in the Imo-river and affected the communities of Higashitakezawa and Terano in Koshi-Nagaoka. In Kogomo, upstream of the Higashitakezawa natural dam, some houses were submerged. There was high possibility of debris flow occurrence in the downstream area originating from the collapse of natural dams. In order to protect the downstream areas such as Ryuko (101 households: 436people) in Uonuma from successive possible sediment disasters, the prefecture undertook to manage disaster mitigation using monitoring measures. The authors would like to introduce the disaster monitoring and warning system planned by Niigata prefectural government and report on counter measures undertaken during critical seasons (rainy season, typhoon season, and early spring when snow melts) following the 2004 earthquake.

Keywords: warning system, wire-sensor, water level gauge, TV camera, standard for evacuation

Introduction

Niigata prefecture is located in the central part of Japan and faces to the Sea of Japan. Niigata Prefecture has a total area of 12,582 square kilometers. 25 percent of the territory is flat land at sea level. The remaining 75 percent is comprised of hilly or mountainous areas. The hilly areas along the prefectural boundaries, namely the central (Chuetsu) and south-east (Joetsu) areas, are recognized as the areas with the highest number and density of landslides prone areas. The distribution of the Earthquake intensity is shown in Fig.1. After the occurrence of the earthquake, on October 28, 2004, we have organized a committee for the emergency investigation in the Imo-river catchment. The committee consists of a professor of Niigata University, government officials of the Ministry of Land, Infrastructure and Transport and staff members of the department of public works, Niigata Prefectural Government. We investigated the affected area from helicopter and analyzed aerial photographs to grasp the situation of the Imo-River basin. In order to minimize the danger of secondary disasters in the downstream area, we also set water level gauges and wire-sensors to monitor the situation of natural dams continuously and take precautions against possible debris flow occurrence. The Ministry of Land, Infrastructure, and Transport installed monitoring cameras at five locations, which allow local headquarters as well as national and prefectural headquarters, to receive visual information on real time. Additional water gauges and wire-sensors were installed on the Koimo River Bridge near Ryuko to monitor the water level changes. The collected data were sent to the community office of Ryuko in Uonuma, the Uonuma City Office, and the Uonuma Regional Promotion Office of Niigata Prefecture.

In addition, to ensure a timely evacuation, a security alarm and two revolving lights were set at Ryuko, the most vulnerable area, and emergency radios were installed in all residences in the community to receive warning information from the headquarters.

Methods

1. The warning system of natural dams in Imo-river basin

We set the water level gauges and wire-censors at the natural dam of Higashitakezawa (Fig.2) and Koimo River Bridge. And the monitoring stations were fixed in four locations in the community of Ryuko in

pp. 759–768 ©2006 by Universal Academy Press, Inc. / Tokyo, Japan

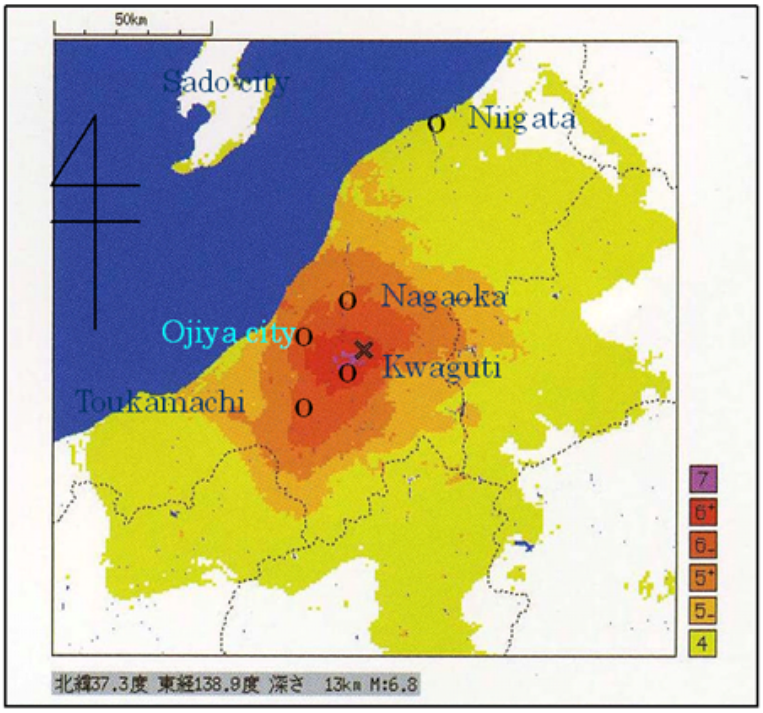

Fig. 1. Earthquake intensity map (Japan Meteorological Agency)

Fig. 2. The natural dam at Koshi-Higashitakezawa (10.24.2004)

Uonuma city that is located downward in the Imo-river basin (Fig.3).

① Higashitakezawa natural dam observation point
A) Water level gauge
Crystal water gauge (the sensor of pressure system by oscillator) was used for observation of water

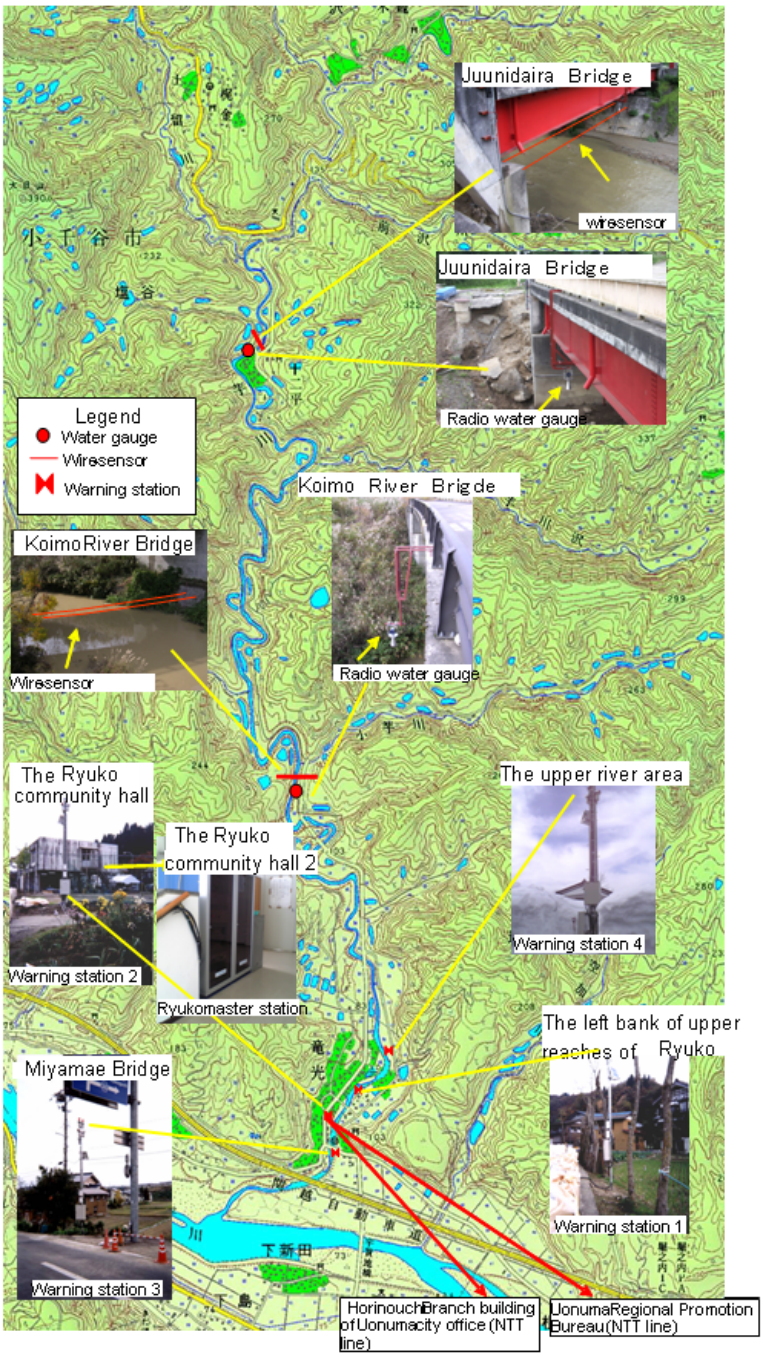

Fig. 3. Warning system of the Imo river basin

level. When the sensor is pressured, the frequency of the oscillator changes. By pressing on the lower part of the sensor, the pressure is transmits to the crystal oscillator. The material of the sensor is made of stainless steel (SUS316). It weights about 2.5kg and is 240mm long and 60mm in diameter. The range of measurement is about 0 to 20meters. It is powered by a solar battery (Fig.4). In order to carry out construction works by the Ministry of Land, Infrastructure and Transport, the measuring system was removed. we newly a radio water level gauge at Juunidaira Bridge in the downstream area in November, 2005.

B) Wire-sensor system

This system is used for detecting mudflow and sediment movement on the wire-cable that is made of conductor. This wire-cable is set on check dams and bridges. The cutting off of this wire signals occurrence of a sediment disaster. The wire is rapped with polyvinyl chloride of 1mm thick and the wire itself as conductor is made of galvanized steel line which has a diameter of about 0.8mm (Fig.5). This wire-sensor installed at the

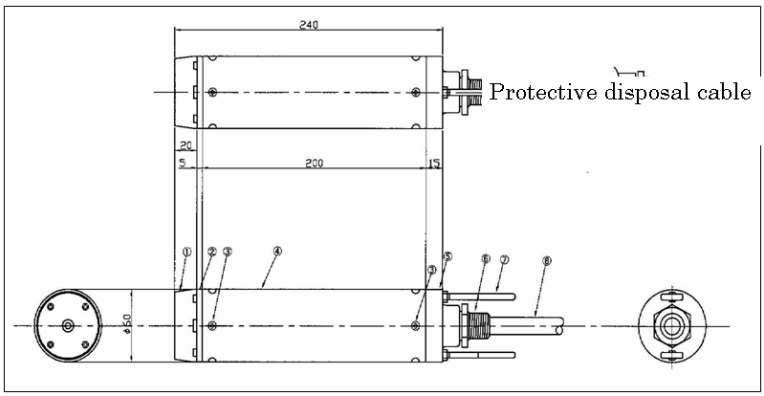

Fig. 4. Crystal water gauge structure

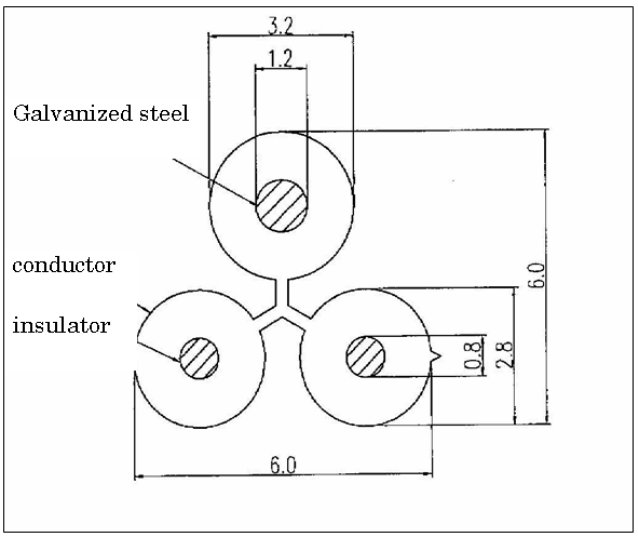

Fig. 5. The structure of wire

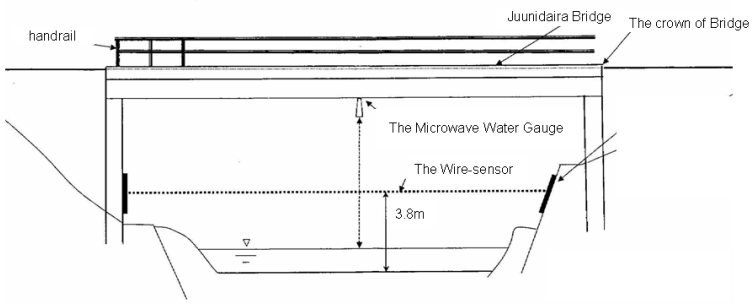

Fig. 6. Installation of setting wire-sensor and microwave water level gauge

Juunidaira Bridge where the water level gauge is also set. The outline of the installation is shown in Fig.6 and Fig.7.

② Koimo River Bridge observation point

A) Water level gauge

This instrument is a microwave water level gauge (Fig.8), and measures the distance between the gauge and the surface of the water. It is made of aluminum and its range of measurement is about 0 to 20 meters. The warning message will be signaled, when the water level measured by this gauge exceed the critical level

Fig. 7. Wire-sensors at the Koimo River Bridge

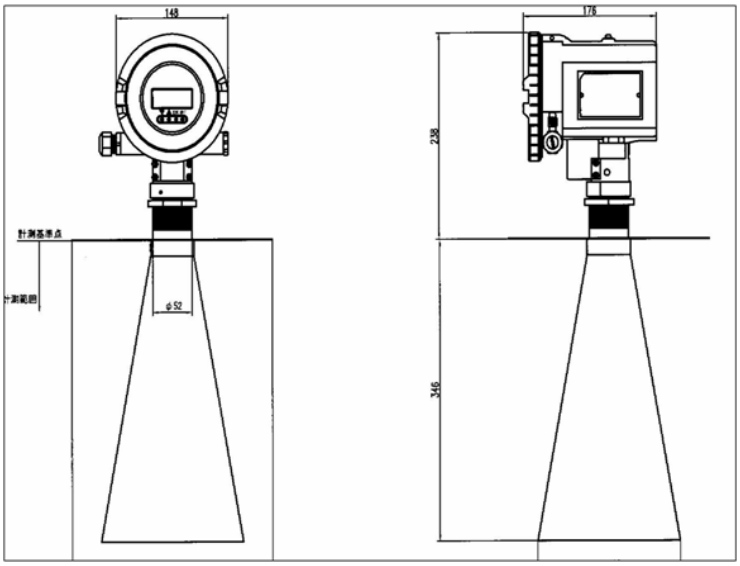

Fig. 8. Structure of microwave water level gauge gauge

decided beforehand (Fig.9, Fig.10).

B) Wire-sensor system

This wire is similar to the wire set at the Higashitakezawa natural dam observation point.

③ Master station of the Ryuko hall (Fig.10)

The main monitoring system was set in the hall of the community of Ryuko because it was the most important public hall and the strongest building in this area. All information and data gathered by the monitoring instruments set in the Imo-river basin are collected here for analysis by local government staffs.

④ Warning systems at four points: the left bank of upper river in Ryuko, the community hall of Ryuko community, Miyamae Bridge, the uppermost river

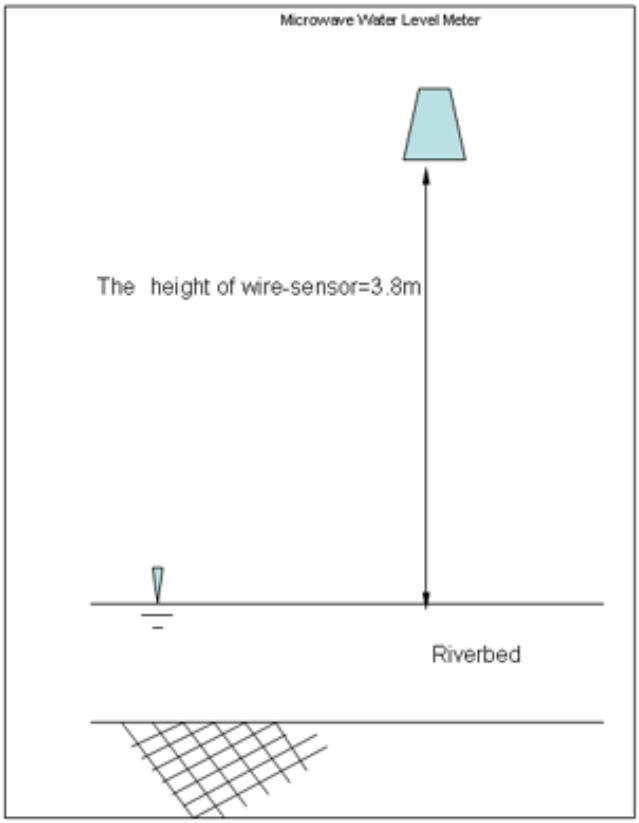

Fig. 9. The mechanism of water gauge

Fig. 10. Revolving lights set up at the Ryuko Community Hall

When debris flow occur, as signaled by the rupture of the wire-sensor, sirens are sounded and revolving lights are turned on reporting to the residents of Ryuko area the occurrence of the disaster. The lights set at Juunidaira Bridge and Koimo River Bridge are yellow and red, respectively.

⑤ Surveillance points of the local government (Fig.11)

We built the system that the information gathered to the Ryuko community hall was forwarded to the

Fig. 11. Security alarm in Ryuko

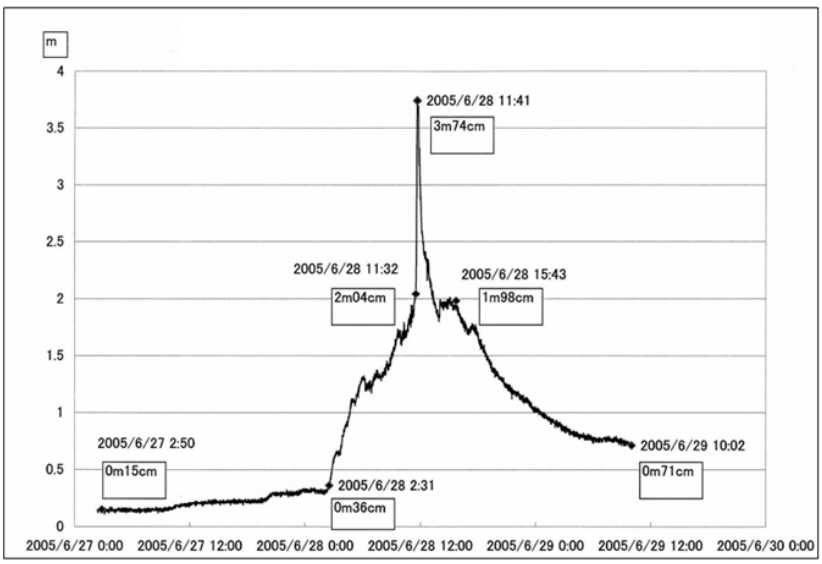

Fig. 12. Change of water level at Koimo River Bridge

Uonuma city and the Uonuma Regional Promotion Bureau area.

⑥ Images and monitoring by TV camera

Five TV cameras were set by the Ministry of Land, Infrastructure and Transport. Three of them were set at the Higashitakezawa natural dam, one at the Terano natural dam and one at the Koimo River Bridge. Real-time image of the situation in the Imo-river basin were collected. These images were broadcasted to the Ryuko hall of the Uonuma city office, the Uonuma Regional Promotion Bureau and many other local governmental offices.

2. The standards for evacuation during ordinary or emergency situations

① Ordinary situation (up to the completion of countermeasure works)

The standards for evacuation during ordinary situation are classified into four stages.

A) The precaution stage

When the water level of the reservoir at the Higashitakezawa natural dam point reaches 1.5m below the critical level.

When the water level exceeds this critical level, the water will overflow from the reservoir.

B) The stage of continuous monitoring

When the water level of the reservoir at the Higashitakezawa natural dam point reaches 1.0 m below the critical level.

In this situation, the prefectural government staffs continuously monitor the situation, estimate the changes of water level while communication with the Uonuma city office is maintained.

C) The stage of 1 hour before the beginning of overflow

The prefectural government staffs inform the Uonuma city office about the changes of the water level.

D) The stage of warning for evacuation

The staffs of the prefecture government give real time information to the Uonuma city office by mean of TV cameras from the starting of overflow. The necessary information from the Ministry of Land, Infrastructure and Transport, Hokuriku Regional Development Bureau, will be continuously collected. The staffs are on the alert for an emergency.

② Emergency situation (In the case of the occurrence of debris flow, heavily rain warning or critical report from the construction site at the Higashitakezawa natural dam)

A) The inhabitants of Ryuko area

When sirens sound and the revolving lights on following the occurrence of a debris flow, local residents must take refuge into the four designated evacuation areas. After individual receiving sets were distributed to each family, the information was able to be transmitted to each family.

B) The administrative system

The news of the occurrence of the debris flow is transmitted to the Horinouchi general office of the Uonuma city and to the Uonuma Regional Promotion Bureau. The concerned agencies act together and mutual consultations are maintained through an emergency network set up for the occasion. The staffs of the Uonuma Regional Promotion Bureau are dispatched to the scene in order to confirm the situation and report on the debris flow.

3. The evacuation system according to several scenarios

After thorough consultations, several evacuation schemes were established according to the criticality of the situation at the two monitoring locations.

① Warning at the Koimo River Bridge site

Case1: Warning by the wire-sensor or the water gauge
Probable reaching time of debris flow: 15 minutes

→ The warning message will not be transmitted to the community of Ryuko.

→ The information will be announced by radio to each family of Ryuko

→ The warning message will be transmitted the the Uonuma Regional Promotion Bureau and the Horinouchi general office of Uonuma city.

Case2: Warning by both the wire-sensor and the water gauge
Probable reaching time of debris flow: 4 minutes

→ As a rule, all sirens must be set on

② Warning at the Juunidaira River Bridge site

Case3: Warning by the wire-sensor or the water gauge
The message will not be transmitted to the community of Ryuko
Case4: Warning by both the wire-sensor and the water gauge

→ As a rule, all sirens must be set on

The practical evacuation action should be organized in different timing in accordance with the possible reaching time of debris flow.

Fig. 13. The Miyamae River Bridge on June 28, 2005

4. An actual case of emergency warning

A flood occurred on June 28, 2005 (Fig.12). Alarm information was transmitted to individual radio receiving sets at 11:39AM on June 28, 2005. The process of the actual evacuation actions are described as follows.

On June 27, 2005,

At 18:34 warning against heavily Rain and flooding were announced.

On June 28, 2005,

At 11:39 the wire-sensor set up at Koimo River Bridge ruptured and the individual radio receiving sets installed in the community of Ryuko sounded, and emergency evacuation mail messages were send.

At 11:40 the warning system sounded at the Uonuma Regional Promotion Bureau. The staffs were dispatched to the field for investigation. The flow of muddy stream was confirmed by images transmitted by monitoring TV camera.

At 11:43 this information was transmitted to the administrative systems.

At 11:50 the inhabitance of Ryuko area began taking refuge into the evacuation centers

At 12:00 the water level was just about 1m under the structure of Miyamae Bridge (Fig.13), and an amount of large woody debris floated. This information was also transmitted to the executive members of the department of public works, Niigata Prefecture Government. The situation of traffic regulation was also to be transmitted. The Uonuma city office set up the local headquarter for necessary arrangements.

At 12:55 thirty people in Ryuko area volontairy took refuge in the nearby shrine. They were then transported to the Ryuko community hall by local fire department for better security.

At 13:15 the evacuation activities are completed. Thirty people took refuge to the shrine and fifteen people to the Ryuko community hall.

At 14:00 the general headquarter is set up in the Uonuma city office.

At 14:15 it is reported that the reason of the cutting off of the wire-sensor is the increase of the water level and also the twisting of branches on the wire-sensor.

At 18:50 two watchmen are stationed at the Koimo River Bridge to observe the situation of the river.

On June 29, 2005,

At 14:00 the authorities concerned investigated the area by the helicopter and confirmed that a large scale collapse didn't occur.

At 15:40 this information was reported to the mayor of the Uonuma city.

At 16:00 the mayor decided to cancel the alert.

At 18:40 the wire-sensor was restored completely.

Conclusion

We were obliged to install several warning systems at Ryuko area for the evacuation of residents in emergency situations. The warning systems were installed under the most suitable condition in this area by trial and error. We are gong to develop a useful and reliable monitoring and warning systems. Individual elements of the system are still in stand of improvement. It was very useful for actual evacuation that we utilize both the information of the cutting off of the wire-sensor by the rising water and of the visual observation of disastrous phenomena by TV camera. We think that it is meaningful to introduce this type of system as a prototype for future models of warning systems. Even if the reconstruction works is completed, we will continue maintaining the warning system as a precaution for unforeseen emergency cases.

Acknowledgment

Lastly, we would like to express our appreciation to those who have made great efforts in establishing a warning and evacuation system for the Ryuko area of Uonuma City following the Niigata Chuetsu Earthquake, including Dr. Marui of Niigata University, the staff of the Ministry of Land, Infrastructure and Transport, the National Institute for Land and Infrastructure Management, as well as the Public Works Research Institute.