Internationales Symposion
INTERPRAEVENT 2004 – RIVA / TRIENT

CONSEQUENCES OF THE AVALANCHE WINTER 1999 IN SWITZERLAND: THE INTERCANTONAL EARLY WARNING AND CRISIS INFORMATION SYSTEM IFKIS

KONSEQUENZEN AUS DEM LAWINENWINTER 1999 IN DER SCHWEIZ: DAS INTERKANTONALE FRÜHWARN- UND KRISENINFORMATIONSSYSTEM IFKIS

Michael Bründl[1], Hans-Jürg Etter[1], Christian Klingler[2], Michael Lehning[1], Manfred Steiniger[1], Jakob Rhyner[1], and Walter Ammann[1]

ABSTRACT

After the avalanche winter 1999 in Switzerland the project IFKIS was initiated. The three main parts of the project were the development of a compulsory checklist for avalanche safety services, a modular education and training course program and an information system for security services. The information system was developed in order to improve on the one hand the information flux between the national avalanche warning centre at SLF and the local forecasters and on the other hand the communication between the avalanche security services in the communities. The results are a contribution for a further improvement of the basics of organizational measures in alpine natural hazard risk management.

Key words: risk management, information system, preparedness.

ZUSAMMENFASSUNG

Nach dem Lawinenwinter 1999 wurde in der Schweiz das Projekt IFKIS gestartet. Die Hauptinhalte des Projekts waren die Erarbeitung von Grundlagen für Pflichtenhefte, ein Ausbildungskonzept sowie ein Informationssystem für Sicherungsdienste. Das Informationssystem wurde entwickelt um einerseits den Informationsfluss zwischen der Nationalen Lawinenwarnzentrale am SLF und den lokalen und regionalen Sicherungsdiensten, andererseits aber auch die Kommunikation zwischen den Lawinendiensten zu verbessern. Die Ergebnisse des Projekts sind ein Beitrag für die weitere Verbesserung der Grundlagen für organisatorische Massnahmen für das Risikomanagement alpiner Naturgefahren.

Key words: Risikomanagement, Informationssystem, Ereignisvorsorge.

1 WSL Swiss Federal Institute for Snow and Avalanche Research SLF, Flüelastrasse 11, 7260 Davos Dorf, Switzerland (Tel.: +41-81-417-0172; Fax: +41-81-417-0110; email: bruendl@slf.ch)
2 Alpine Safety and Information Centre, Bruggfeldstrasse 5, 6500 Landeck, Austria (Tel.: +43-5442-61400; Fax: +43-5442-61400 400; email: christian.klingler@alpinesicherheit.com)

INTRODUCTION

During the last few decades, the protection of villages and traffic routes against snow avalanches has been based on a combination of technical, biological and organizational measures and land-use planning. After the avalanche winter of 1950/51, which caused 98 deaths in Switzerland, 75 of them in buildings, technical measures such as the construction of avalanche barriers in the starting zones, were the main focus of efforts to protect exposed villages against avalanches. To date around CHF 1.5 billion has been invested in this kind of avalanche protection. Starting in the 1960s, the concept of hazard maps that subdivide avalanche threatened areas into red zones (high pressure and/or frequently endangered), blue zones (less pressure and less frequently endangered) and white zones (no apparent danger) were developed and introduced in almost all villages which can be affected by avalanches.

Particularly in recent years, organizational measures, such as artificial avalanche release, closure of traffic routes and evacuations, have become more and more important. Essential elements that form the basis of organizational measures include avalanche forecasting, early warning systems, measurements, data produced by modelling, and observations from the terrain. To improve these basics, the framework "Avalanche Warning CH 2000" (Russi et al., 1998) was initiated and successfully completed. The main results of this effort are a network of automatic stations for the measurement of meteorological and snow parameters and the development of physically (Bartelt and Lehning, 2002, Lehning et al., 2002a,b) and statistically based computer models (Brabec, 2002).

During January and February 1999, these improvements had to face their first hard test. From 27 January to 25 February 1999, three precipitation periods brought over 5 m of new snow to the Swiss Alps, resulting in 1350 destructive avalanches and 17 deaths. The event analysis showed that direct damage at buildings, traffic lines, power companies, and telecommunication provider amounted to CHF 440 million (SLF, 2000; Wilhelm et al., 2000). The large mass of snow and the numerous avalanches caused also economic losses in several sectors. Due to the stormy weather and the high avalanche danger many cable ski resorts had to close for several days (Nöthiger, 2001). Because of closed traffic connections many tourists could not arrive at their holiday destinations or companies could not deliver goods in time. In many regions this had considerable consequences to the local economy. This so-called indirect damage amounted to CHF 330 million (Nöthiger, 2002).

But despite this damage, the event analysis showed that the concept of integral avalanche protection, which includes technical, biological, and long-term land-use planning, had worked well. Avalanche defence structures prevented greater damage and only at some places avalanches exceeded existing avalanche hazard zones. However, in the field of organizational measures, some deficiencies became apparent on the part of the safety services and in their performance in crisis management, especially in regions, which are less affected by avalanches. The crucial points are that tasks should be well defined, that the safety services should be well trained, and that there should be an efficient information flow between the national warning service and the safety services and between those responsible for safety in villages, in tourist facilities and on traffic routes.

These deficiencies were approached in the project "Intercantonal Early Warning and Crisis Information System" ("Interkantonales Frühwarn- und Kriseninformations-System", IFKIS), carried out by the Swiss Federal Institute for Snow and Avalanche SLF at the request of the Swiss Forest Agency BUWAL. The results of this project and ongoing work with regard to avalanche risk management are presented in this paper. A detailed report on the results of the project is given in SLF (2002).

In the first part of the paper, we give an overview of the topics that are included in a compulsory booklet for safety services, which are responsible for villages or traffic routes. In

the second part, the education and training programme for members of these safety services is described, and the third part presents the information and communication system.

THE TASKS OF SECURITY SERVICES

In all the municipalities in Switzerland where avalanches can occur, one or more avalanche safety services are in charge of the safety of houses, streets and tourist facilities. Depending on the size of the municipality, the responsibility is divided among several organizations. In Davos, in the canton of Grisons for example, the tourist board is responsible for safety on cross-country skiing tracks and winter trails, the cable-car companies are responsible for safety on ski slopes, and the safety service of the municipality is in charge of safety in houses and on the streets. For safety on roads between villages, the cantonal highway department is responsible, and for railways, the regional railway company. The main task of all these services is the continuous observation of the snow and avalanche situation in their control area.

The event analysis of the avalanche winter showed that requirement specifications for these tasks are not in use in all municipalities. Based on existing examples taken from several communities, we developed a checklist for a compulsory booklet as the basis for a version adapted to local needs. The following points are included:

1. Purpose and definition of the area.
2. Tasks: measurements, observation of the avalanche situation and data transmission to the regional or national centre, preparedness, maintenance of all equipment, implementation of safety measures such as artificial avalanche release, closures or evacuations, collaboration with rescue teams, continuous education and training.
3. Organization: constitution and organizational diagram of the service, election of the members, subdivision into departments like leadership, observation, warning and forecasting, information and public relations, rescue.
4. Responsibility and spheres of competence of the members and of the leadership.
5. Liability and insurance.
6. Costs and finances.
7. Validity: time period in which the compulsory booklet is valid.

This checklist should guarantee that the requirement specifications of all avalanche safety services in Switzerland contain these minimum requirements. This ensures that the work of all safety services is founded on the same basic assumptions, which is an essential prerequisite for equal safety in villages and on roads.

Another crucial point is the educational level of those responsible for safety. To achieve the required level, an education and training programme has been developed.

EDUCATION AND TRAINING PROGRAMME

The education and training concept is based on existing courses of the Swiss Cable Car Organization, which address security services of ski resorts. They are supplemented by courses specifically adapted for security services of villages, roads and railways. Besides this target group the courses also address the snow and avalanche observers of SLF, which often are also members of security services. All courses are offered and conducted by SLF.

The level A course is addressed to members of safety services whose task is the preparation of information for decision makers and to SLF observers. The level B course is addressed to people in leadership positions within safety services and local authorities (decision makers).

Both the A and B level courses contain a basic part. In addition, the level A course is split into three modules for subsequent specialisation. These are:

Module 1: Snow and avalanche observation.
Module 2: Estimation of the local avalanche danger (digging of snow profiles on slopes, transmission of data, etc.).
Module 3: Estimation of the risk for objects (housing, traffic routes, etc.).

All courses are offered in German and French alternatively, according to need at the beginning of winter. Refresher courses at both levels are offered every two or three years also in both languages. Starting in November 2000, very positive experience has been obtained during the last three years. The time sequence of courses is illustrated in Figure 1.

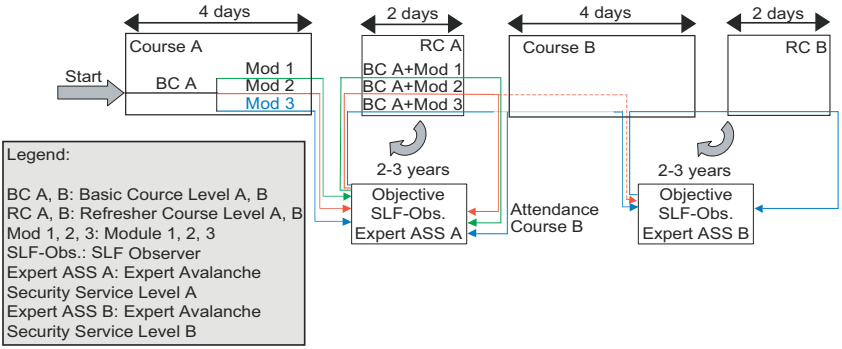

Figure 1: Time sequence of SLF courses at level A and B. After completing course A an "expert avalanche safety service level A" can directly visit the course at level B after 2-3 years according to his/her education objective. At both levels refresher courses are offered. All courses are given alternatively in German and French (special lessons also in Italian).

Abbildung 1: Zeitliche Abfolge der SLF Ausbildungskurse A und B. Nach dem Abschluß des Kurses A kann ein „Sachverständiger Lawinendienst Stufe A" entsprechend dem Ausbildungsziel direkt den Kurs B besuchen. Auf beiden Stufen finden Wiederholungskurse statt. Alle Kurse werden abwechselnd in Deutsch und Französisch (spezielle Lektionen auch in Italienisch) angeboten.

INFORMATION SYSTEM

The third prerequisite for effective and efficient organizational measures to manage avalanche risk in villages and on roads is up-to-date, precise and temporally highly resolved weather and snow data combined with well coordinated safety measures based on good communication between the organizations involved. The information system IFKIS addresses two directions of information flow (Figure 2):

1. Information flow from the national centre to the safety services (vertical information, warning information system WIS).
2. Information and communication flow between the safety services (horizontal information, measures information system MIS).

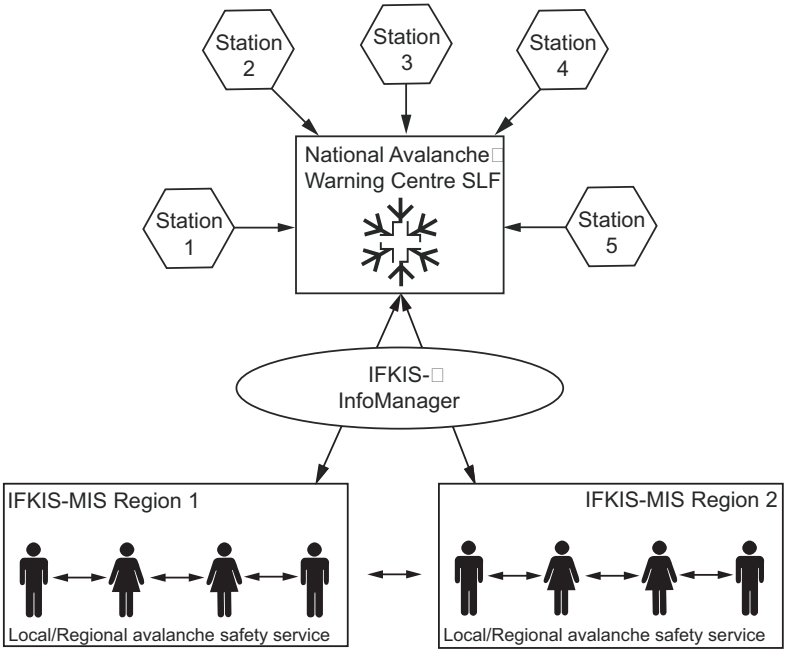

Figure 2: Measurement and observation data are collected at the National avalanche warning centre at SLF in Davos. The information system for avalanche warning (IFKIS-InfoManager/IFKIS-WIS) supports the bi-directional information flow from SLF to the local and regional safety services and the "measures-information system" (IFKIS-MIS), the horizontal information and communication paths for crisis management between those responsible at the local level.

Abbildung 2: Mess- und Beobachtungsdaten werden an die National Lawinenwarnzentrale am SLF in Davos übermittelt. Das Informationssystem für die Lawinenwarnung (IFKIS-InfoManager/IFKIS-WIS) unterstützt den Informationsfluss zwischen dem SLF und den lokalen und regionalen Sicherungsdiensten. Das „Maßnahmen-Informationssystem IFKIS-MIS" unterstützt den horizontalen Informations- und Kommunikationsfluss zwischen den Verantwortlichen auf der lokalen Stufe für das Krisenmanagement.

Warning information system

The basic information for safety services is the national ("evening") avalanche bulletin issued by SLF daily at 5 pm and broadcast via radio, phone, fax, a series of newspapers, and the internet. This evening bulletin is completed with regionally resolved ("morning") bulletins at 8 pm.

To safety services both avalanche bulletins are also disseminated via the information system IFKIS-InfoManager. This password-protected internet based information platform can only be accessed by authorized users and provides all the information, which is needed by safety services in order to make decisions e.g. on artificial release of avalanches, safety in villages, on traffic lines and in tourist facilities. The information available via the IFKIS InfoManager looks as follows:

- Avalanche bulletins, maps for amount of new snow, three-day sum of new snow, total snow depth, snowpack stability.
- Weather report, special weather products, forecast of new snow amount, radar and satellite images.
- Measurement data of SLF observers (meteorological data and field observations).
- Measurement data from automatic weather station networks (wind and snow stations).
- Model data calculated by the physical snowpack model SNOWPACK.
- Early warning in case of intensive snowfall and/or increase of avalanche danger within 3 days to level five.

Because the IFKIS-InfoManager is based on Internet technology, all information can be accessed from every computer connected to the Internet. No additional software needs to be installed. This is an improvement compared to the formerly used software InfoBox (Russi et al., 1998), which had to be locally installed on a computer. An example of a IFKIS-InfoManager screen shot is shown in Figure 3.

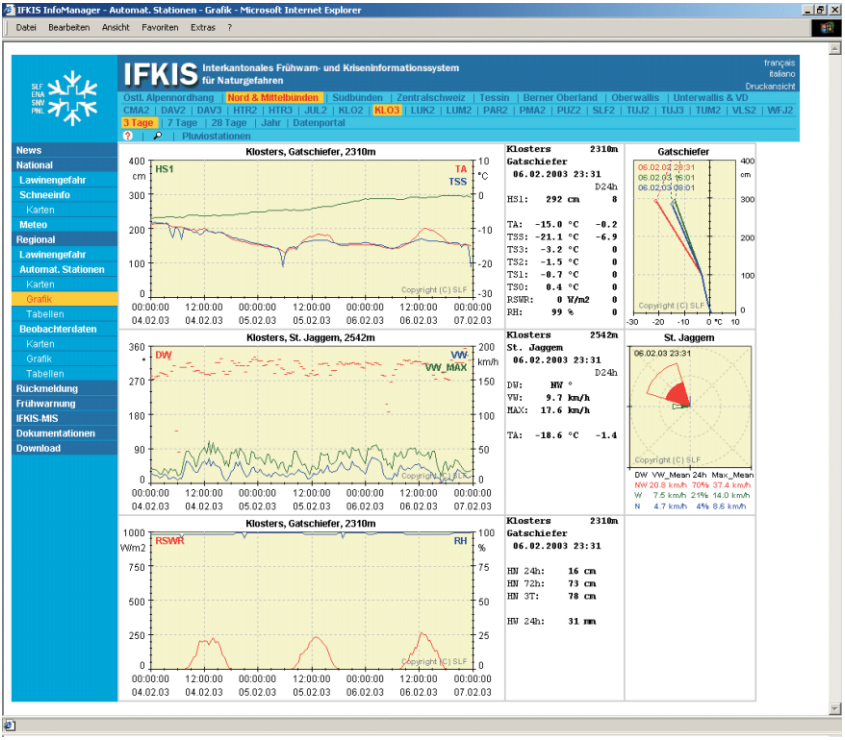

Figure 3: Screen shot of the IFKIS-InfoManager. This information platform is accessible only for authorized users and provides the information necessary for safety decisions in villages, on roads, railway lines, and tourist facilities.

Abbildung 3: Bildschirmansicht des IFKIS-InfoManagers. Diese Informationsplattform ist nur für berechtigte Benutzer zugänglich und bietet die für Sicherungsentscheide in Siedlungen, auf Strassen, Schienen und touristischen Einrichtungen notwendigen Informationen an.

During the last years data measured at automatic weather stations has been used for modelling snowpack properties. The Swiss snow cover model SNOWPACK (Bartelt and Lehning, 2002; Lehning et al., 2002a; Lehning et al., 2002b) is used to operationally assess new snow precipitation, drifting snow and snow cover development at now approximately 100 automatic weather stations in the high alpine zone of the Swiss Alps. A good prediction of snow metamorphism and surface hoar formation (Lehning et al., 2002b) allows the simulation of weak layer development with reasonable accuracy (Figure 4). Recently, first efforts were made to give a numerical stability estimation for a model profile (Lehning et al., 2003). Integrating modelled up-to-date snowcover properties into IFKIS-InfoManager is expected to further enhance the information basis for safety services and to improve the accuracy of decisions in future years.

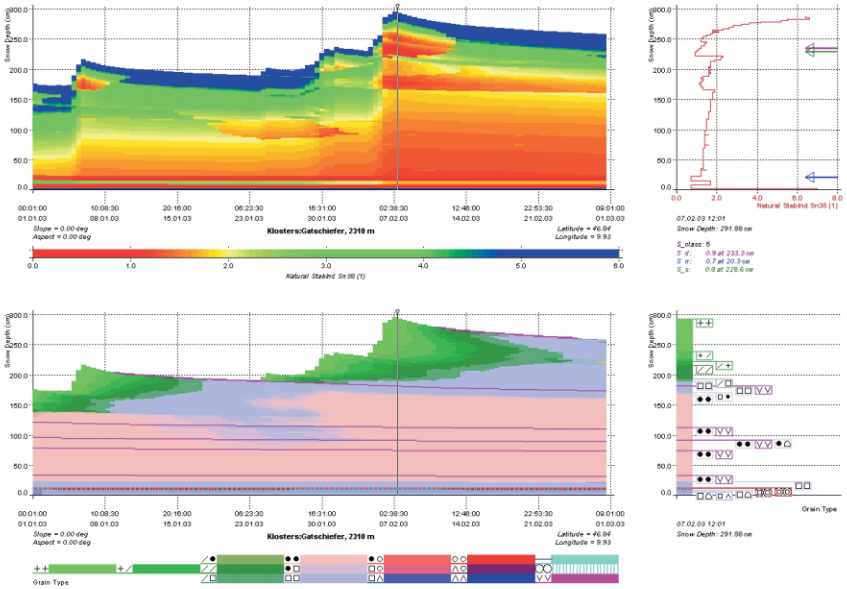

Figure 4: Timely development of the natural stability index and grain types for the IMIS station Klosters Gatschiefer in January / February 2003. The time development is shown for each snow layer and is coded in colour. At the marker position, the corresponding profile is given at the right-hand side of the graph. For stability, not only the stability index profile is given but also the minimum is marked by an arrow (blue for natural index). Two additional arrows give the locations of the two remaining stability indices (deformation rate in pink and skier in green). The minimum index values and their height are also written below the profile graph. The number for the stability class (S_class: 5) is meaningless in this graph. The stability class estimation is not implemented yet.

Abbildung 4: Zeitliche Entwicklung des Stabilitätsindexes und der Kornformen aus den Daten der IMIS Station Klosters Gatschiefer für Januar / Februar 2003. Die zeitliche Entwicklung ist für jede Schneeschicht in Farbe dargestellt. Für den gekennzeichneten Zeitpunkt ist das entsprechende Schneeprofil auf der rechten Seite der Abbildung dargestellt. Bezüglich der Stabilität wird nicht nur das Stabilitäts-Indexprofil gezeigt, sondern auch das Minimum mit einem blauen Pfeil (blau für natürlichen Index). Zwei zusätzliche Pfeile bezeichnen die Positionen der anderen beiden Stabilitätsindices an (Deformationsrate in Pink und Skifahrer in Grün). Der minimale Indexwert und seine Höhe im Profil ist zusätzlich unter der Graphik angegeben. Die Zahl für die Stabilitätsklasse (S_class: 5) ist in diesem Zusammenhang bedeutungslos, da diese Abschätzung noch nicht implementiert ist.

The IFKIS-InfoManager is also used as a wake-up tool in case that a critical avalanche situation is imminent. The early warning “Snow and Avalanche Danger” is only issued when there is a high probability that the next 72 hours will bring at least 1 m of new snow and that the avalanche danger will increase to level 5 (“very large”, the highest level). If a danger level less than level 5 is predicted, then an “Information Heavy Snow Fall” is issued. This information is accompanied by an SMS and/or pager alert addressing safety services with a request to consult the IFKIS-InfoManager. The critical regions are displayed in a map, which indicates the probably affected regions in the Swiss Alps (Figure 5). Receiving this early warning enable safety services to prepare themselves for an upcoming critical avalanche situation.

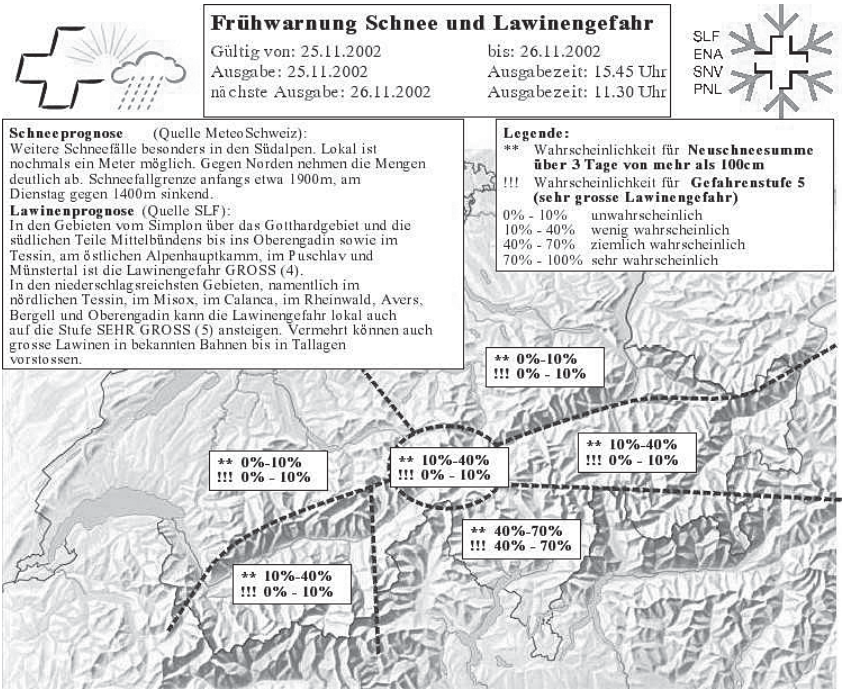

Figure 5: Example of a map showing an „Early Warning Snow and Avalanches“ in IFKIS-InfoManager.

Abbildung 5: Beispiel einer Karte “Schnee und Lawinengefahr” im IFKIS-InfoManager.

Using the Internet technology easily allows including further information. In the forthcoming years IFKIS-InfoManager will be expanded with information, which is necessary to better manage other alpine natural hazard processes, like e.g. floods or debris flows. Integrating all important information into a single system will considerably improve the basis for efficient crisis management.

Measures information system

Efficient crisis management for villages and traffic routes requires good coordination between the safety services involved. In many cases, there are several organizations responsible for the safety in the different fields, whose decisions have to be taken jointly. The most widespread means of communication, the telephone, is not always the optimal way, since both parties have to be available simultaneously. Bringing all parties up to the same information level in a hectic situation takes too many telephone calls and therefore too much time.
In collaboration with the Alpine Safety and Information Centre ASI in Landeck, Austria SLF developed an internet platform which provides all the safety services involved with the means to enter their decisions into a computer system. The system, called IFKIS-MIS ("measures information system") is based on a Content-Management System, which allows the publication of electronic data in several digital formats. The data input is easy, making it accessible also to less experienced computer users. The access to this system is password-protected and, at present, not available to the public. The information system is divided into two parts: a "read-only" part and another part for data input ("write access"). This allows a selective allocation of "read" and/or "write" access to different groups of people. The "write" access is also divided between the different organizations by means of different passwords so that every organization is responsible for their own content. The "read-only" part, which also contains frequently used telephone lists and other specific documents, is shown in the form of a screen shot in Figure 6.
Messages in the system lose their value if the user can't take note of them in cases of absence from their computer terminals. Therefore, an embedded alert system sends an SMS or an e-mail automatically as soon as a new message is saved by the system. In this way, the user is informed rapidly about new messages.
The information system was introduced on a test basis in the region Davos/Klosters in the canton of Grisons in February 2002. For the winter of 2002/03, the test in Davos/Klosters was extended. The region Bernese Oberland joined this project in January 2003 and the canton of Glarus in February 2003. It is planned to integrate other regions in the future.

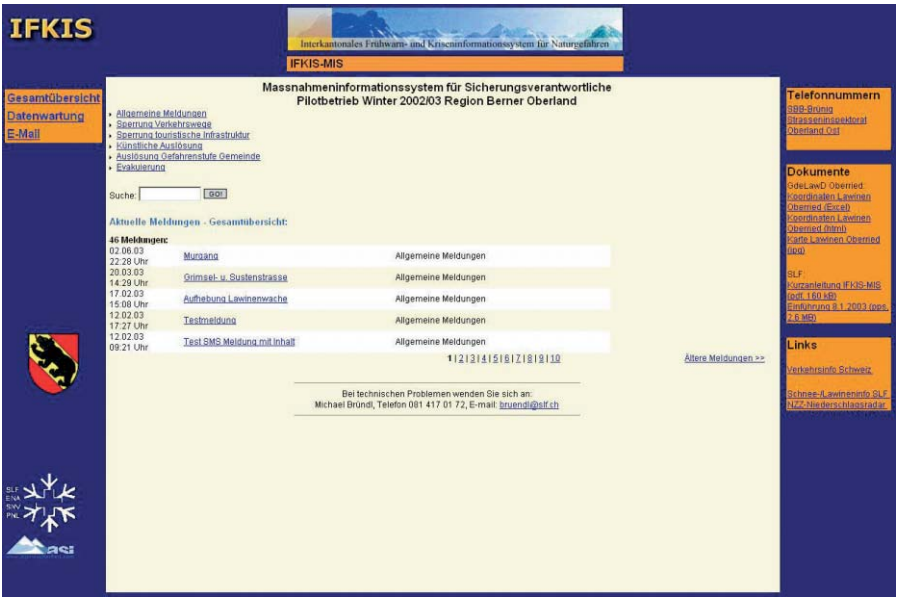

Figure 6: Screen shot of the „read-only“ part of the measures information system IFKIS-MIS.

Abbildung 6: Bildschirmansicht des Bereichs “Meldungen” im Massnahmen-Informationssystem IFKIS-MIS.

CONCLUSIONS

Organizational measures as a part of risk management practices for alpine natural hazards have become important in the last years and will become increasingly important in the future. Minimal closure (or evacuation) times, with a maximal safety, can only be achieved by a concerted improvement in preparedness, organization, and education of the safety services. The right measure at the right time will be the desired aim in every critical situation. This can only be achieved when those responsible are informed in time and when they are able to decide on and to realize the appropriate measures.

An internet-based mutual information exchange is another essential requirement because it allows that all parties involved in crisis management are on the same information level. It is obvious that organizational measures cannot replace technical and biological measures (reforestation) or land-use planning, but in terms of an optimal cost-benefit ratio, they will acquire more and more importance, not only in the field of snow avalanches but for the risk management of other natural hazards as well.

ACKNOWLEDGMENTS

We thank the Swiss Forest Agency for the financial support of this project.

LITERATURE

Bartelt, P. and M. Lehning. (2002): A physical SNOWPACK model for the Swiss avalanche warning; Part I: numerical model. *Cold Reg. Sci. and Technol.* 35(3): 123-145.

Brabec, B. (2002): Computergestützte Regionale Lawinenprognose. *Eidgenössische Technische Hochschule Zürich, ETH-Diss Nr. 14232*, Davos.

Lehning M., Bartelt P.B., Brown R.L., Fierz C., Satyawali P. (2002a): A physical SNOWPACK model for the Swiss Avalanche Warning Services. Part III: Meteorological Boundary Conditions, Thin Layer Formation and Evaluation, *Cold Reg. Sci. Technol.*, 35, 169-184.

Lehning, M., P. Bartelt, B. Brown, C. Fierz and P. Satyawali. (2002b): A physical SNOWPACK model for the Swiss avalanche warning; Part II. Snow microstructure. *Cold Reg. Sci. and Technol.* 35(3): 147-167.

Lehning, M., Fierz, Ch., Brown, B., and Jamieson, B. (2003): Modelling Instability for the Snow Cover Model SNOWPACK. *Annals of Glaciology* (accepted).

Nöthiger, Ch., Bründl, M., Ammann, W.J. (2001): Die Auswirkungen der Naturereignisse 1999 auf die Bergbahn- und Skiliftunternehmen in der Schweiz. *Tourist Review*, Vol. 56, No 1+2, 23-32.

Nöthiger, C.J., Elsasser, H., Bründl, M., und Ammann, W.J. (2002): Indirekte Auswirkungen von Naturgefahren auf den Tourismus – Das Beispiel des Lawinenwinters 1999 in der Schweiz. *Geographica Helvetica*, Heft 2, 91-108.

Russi, T., Ammann, W., Brabec, B., Lehning, M., and Meister, R. (1998): Avalanche Warning Switzerland 2000. *Proceedings of the 11th International Snow Science Workshop*, Sunriver, Oregon, USA.

Eidg. Institut für Schnee- und Lawinenforschung SLF (Hrsg.), (2000): Der Lawinenwinter 1999. Ereignisanalyse. Davos, *Eidg. Institut für Schnee- und Lawinenforschung*. 588 S.

Eidg. Institut für Schnee- und Lawinenforschung SLF (Hrsg.), (2002): Interkantonales Frühwarn- und Kriseninformationssystem IFKIS. Schlussbericht. Davos, Eidg. Institut für Schnee- und Lawinenforschung. 99 S.

Wilhelm, Ch., Wiesinger, Th., Bründl, M., and Ammann, W. (2000): The avalanche winter 1999 in Switzerland - an overview. *Proceedings of the 12th International Snow Science Workshop*, Big Sky, Montana, USA.